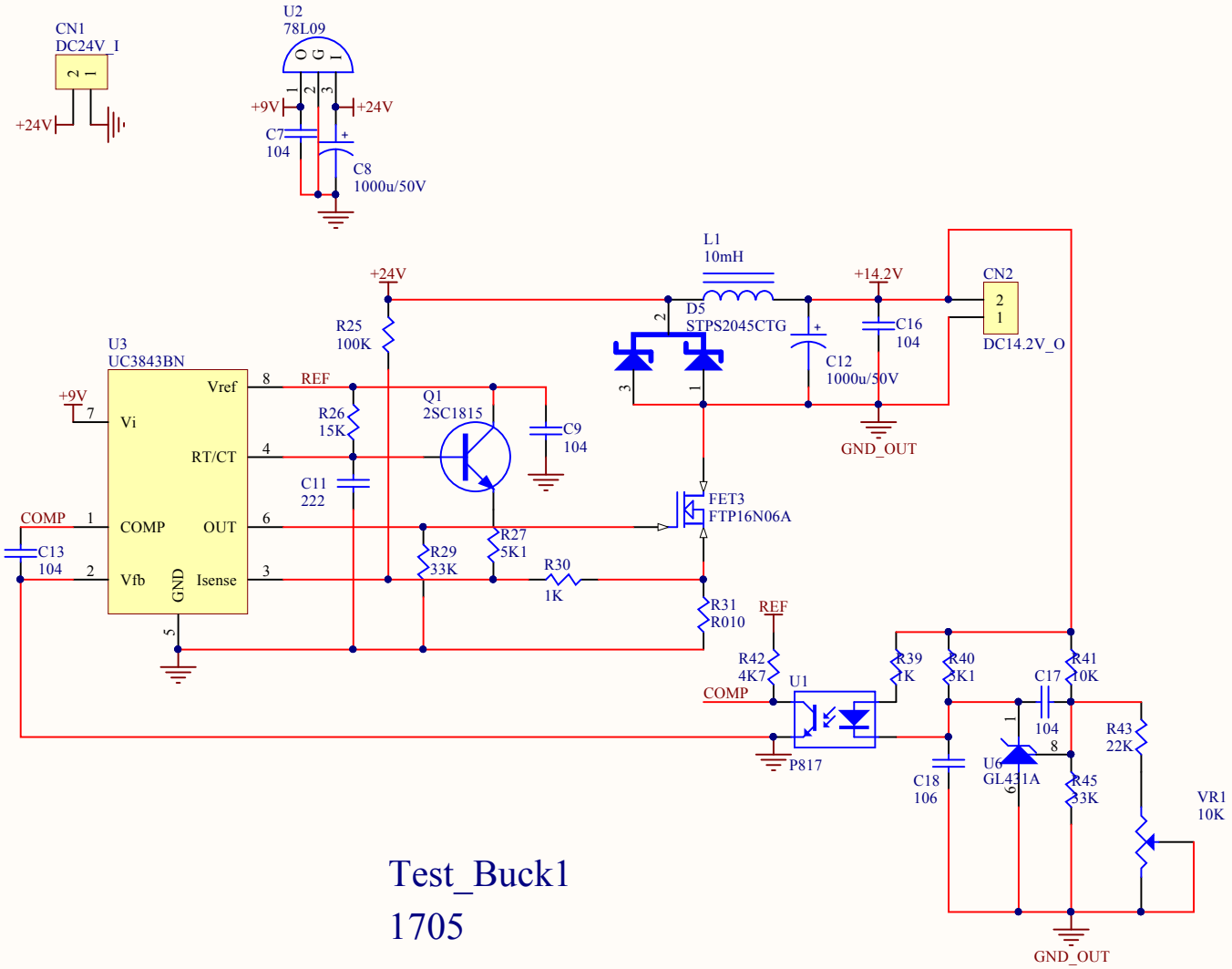

Test_Buck1

1705

Title		
Size A4	Number	Revision
Date: 2017/5/4	Sheet of	
File: E:\AD15\Hydrogen\Test_Buck1.SchDoc	Drawn By:	